M8 INSTRUCTION MANUAL

1. TOOL SPARE PARTS

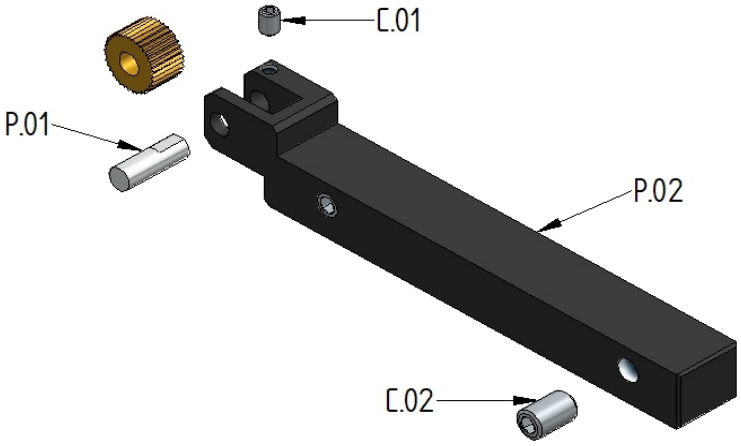

Drawing 1

ITEM	CODE	REFERENCE	DESCRIPTION	ITEMS INCLUDED
P.01	01989701	E 12.4 HM	Axis HM ø4x12	P.01
C.01	01988400	EA M3-3	Knurl pin	C.01
Shank 8x8 *P.02	-	MM8 15.04.08 R/L	Shank 8x8	-
		MM8 15.05.08 R/L	Shank 8x8	
		MM8 15.06.08 R/L	Shank 8x8	
C.02	01981200	EA M5-8	Regulation socket set screw DIN 913 M5x8	C.02
Shank 10X10 *P.02	-	MM8 15.04.10 R/L	Shank 10x10	-
		MM8 15.05.10 R/L	Shank 10x10	
		MM8 15.06.10 R/L	Shank 10x10	
C.02	01900171	EA M5-10	Reg-socket set screw DIN 913 M5x10	C.02
Shank 12x12 *P.02	-	MM8 15.04.12 R/L	Shank 12x12	-
		MM8 15.05.12 R/L	Shank 12x12	
		MM8 15.06.12 R/L	Shank 12x12	
C.02	01900172	EA M5-12	Reg- socket set screw DIN 913 M5x12	C.02

*This item is not sold individually.

Table 1

2. FEASIBLE PATTERNS

M8 form knurling tool is conceived for knurling on pieces:

- With Ø10 mm knurling wheels: diameters between 3 and 50 mm.
- With Ø15mm knurling wheels: diameters between 3 and 100 mm.

The performed pattern depends on the knurls used as shown on the table below:

KNURLING PROFILE		DESCRIPTION	KNURLING WHEEL	AXIAL FEED	RADIAL FEED
	RAA	Right	AA Knurl	✓	✓
	RBL 30º	30° Left helical	BR30º Knurl	✓	✓
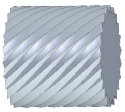	RBL 45º	45° Left helical	BR45º Knurl	✓	✓
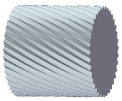	RBR 30º	30° Right helical	BL30º Knurl	✓	✓
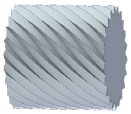	RBR 45º	45° Right helical	BL45º Knurl	✓	✓
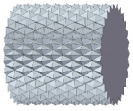	RGE 30º	30º Diamond pattern male	GV30° Knurl	✗	✓
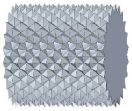	RGE 45º	45º Diamond pattern male	GV45° Knurl	✗	✓
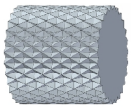	RGV 30º	30º Diamond pattern female	GE30º Knurl	✗	✓
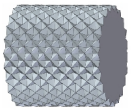	RGV 45º	45º Diamond pattern female	GE45º Knurl	✗	✓
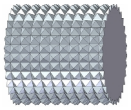	RKE	90º Diamond pattern male	KV Knurl	✗	✓
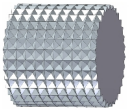	RKV	90º Diamond pattern male	KE Knurl	✗	✓

Table 1

3. CLAMPING AND SETTING THE TOOL INTO THE MACHINE

First, we need to make sure that the knurl rotates freely around the pin. Spread graphite grease if necessary.

Clamp the tool to the turret of the lathe.

While the chuck rotates very slowly, approach the tool to the workpiece until the knurl makes contact with the workpiece.

Approach the knurling wheel to the workpiece following the 'F' direction up until the teeth plunge a little into it. Check out the resulted print. The printed width (h) must be equal to the width of the teeth on the knurl. If the width isn´t correct, change the clearance angle.

The tool and the workpiece need to be aligned as shown on the drawing 2.

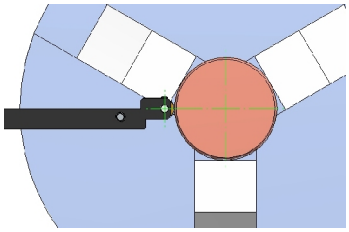

Drawing 2

4. KNURLING ON STEPPED WORPIECES

When knurling stepped workpieces, it is not possible to knurl up to a shoulder. Using this tool, no knurling should be performed closer to 2,5mm from the shoulder itself. In case of using any washer, safety distance would increase depending on the assembly position of the washer and its width.

5. BEGINNING TO KNURL

While the chuck is rotating at the speed recommended at point 8, feed the tool so that 1/3 of the width of the knurling wheel gets in contact with the workpiece.

Press the knurl against the workpiece. The value of the radial feed must be according to the conditions recommended on the point 8 (next page). After that, you will be able to feed longitudinally.

To calculate up to what diameter we must deepen with the knurls, we must take into account the height of the tooth (in the case of standard knurls is always equal to half the step) and the increase in diameter that suffers the material.

That information is available at www.integi.com and in our catalog.

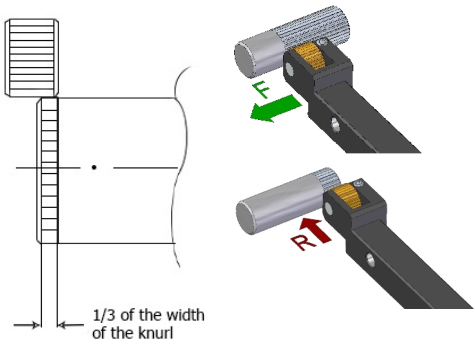

Drawing 3

6. BEFORE AND DURING WORKING PROCESS

- Make sure that the knurl pins are firmly fastened.
- Check that the knurl run free and lubricate it with graphite grease.
- Always apply plenty of coolant, lubricant or cutting oil flowing in order to sweep the swarf away.
- Always feed against the thickest of the areas that hold the pin. If a second run is needed, move the tool away from the workpiece and start again the knurling process. The working direction, longitudinal advance, will always be against the tool.

7. TROUBLE SHOOTING

PROBLEM	CAUSE	SOLUTION
Double knurling	Too slow radial feed at the beginning of the knurling	Increase radial feed at the beginning of the knurling*
	The perimeter of the workpiece is not an exact multiple of the pitch	Turn a diameter that makes the perimeter to be knurled an exact multiple of the pitch*
Knurling wheels easily breakable	Knurling too deep	Reduce the depth to values according to the pitch
Knurling wheels wear out too fast	Knurling too deep	Reduce the depth to values according to the pitch.
	Working conditions are not adequate	Check cutting and traverse feeding speeds.

Table 2

* Sometimes, it is not possible to increase radial feed or it just cannot be radially fed if the workpiece is too weak.

8. RECOMMENDED SETTINGS

MATERIAL	Ø workpiece (mm)	Ø KNURLING WHEEL (mm)	Cutting speed (m/min)	RADIAL FEED (mm/rev)	TRAVERSE FEED (mm/rev) PITCH (mm)			
					0.3÷0.6	0.6÷1.2	1.2÷1.6	1.6÷2.0
Steel 600 N/mm^2	<10	10÷15	20÷50	0.05÷0.10	0.15	0.10	0.08	0.07
	10÷50	15÷20	25÷55		0.20	0.15	0.13	0.10
Steel 900 N/mm^2	<10	10÷15	15÷40	0.04÷0.08	0.12	0.08	0.05	0.04
	10÷50	15÷20	20÷45		0.15	0.10	0.08	0.06
Stainless steel	<10	10÷15	15÷40	0.04÷0.08	0.12	0.08	0.05	0.04
	10÷50	15÷20	20÷45		0.15	0.10	0.08	0.06
Cast steel	<10	10÷15	20÷40	0.05÷0.10	0.15	0.10	0.08	0.07
	10÷50	15÷20	25÷45		0.20	0.15	0.13	0.10
Aluminium	<10	10÷15	25÷45	0.05÷0.10	0.12	0.08	0.05	0.04
	10÷50	15÷20	30÷50		0.20	0.15	0.10	0.06
Brass	<10	10÷15	30÷50	0.05÷0.10	0.20	0.15	0.12	0.10
	10÷50	15÷20	35÷55		0.25	0.20	0.18	0.15

Table 4

www.integi.com

Marking the difference

INTEGI, S.A.

Autonomía Kalea, 5 - 48250 Zaldibar Bizkaia - Spain

+34 943 174 800 integi@integi.com www.integi.com